EDGAR Online

KOPIN CORP

FORM 8-K
(Current report filing)

Filed 01/14/14 for the Period Ending 01/13/14

Address	125 NORTH DRIVE WESTBOROUGH, MA 01581
Telephone	508-870-5959
CIK	0000771266
Symbol	KOPN
SIC Code	3674 - Semiconductors and Related Devices
Industry	Semiconductors
Sector	Technology
Fiscal Year	12/31

Powered By EDGAR Online
http://www.edgar-online.com
© Copyright 2015, EDGAR Online, Inc. All Rights Reserved.
Distribution and use of this document restricted under EDGAR Online, Inc. Terms of Use.

UNITED STATES
SECURITIES AND EXCHANGE COMMISSION
WASHINGTON, D.C. 20549

FORM 8-K

CURRENT REPORT
Pursuant to Section 13 or 15(d)
of the Securities Exchange Act of 1934

Date of Report (Date of Earliest Event Reported) January 13, 2014

KOPIN CORPORATION
(Exact Name of Registrant as Specified in Charter)

DELAWARE	000-19882	04-2833935
(State or Other Jurisdiction of Incorporation)	(Commission File Number)	(IRS Employer Identification No.)

125 North Drive, Westborough MA 02780
(Address of Principal Executive Offices) (Zip Code)

Registrant's telephone number, including area code (508) 870-5959

Check the appropriate box below if the Form 8-K filing is intended to simultaneously satisfy the filing obligation of the registrant under any of the following provisions (see General Instruction A.2 below):

- ☐ Written communications pursuant to Rule 425 under the Securities Act (17 CFR 230.425)
- ☐ Soliciting material pursuant to Rule 14a-12 under the Exchange Act (17 CFR 240.14a-12)
- ☐ Pre-commencement communications pursuant to Rule 14d-2(b) under the Exchange Act (17 CFR 240.14d-2(b))
- ☐ Pre-commencement communications pursuant to Rule 13e-4(c) under the Exchange Act (17 CFR 240.13e-4(c))

Item 7.01. Regulation FD Disclosure.

Kopin Corporation issued a press release on January 13, 2014, a copy of which is attached as Exhibit 99.1 to this report and incorporated herein by reference, in which the Company announced that it will be attending the 16 th Annual Needham Growth Conference (the "Conference") on Wednesday January 15, 2014, at the New York Palace Hotel in New York City at 2:50 pm Eastern Time. In conjunction with participating at the Conference, the Company's management is meeting with investors on January 14, 2014 and January 15, 2014. The Company has prepared a slide presentation in connection with the Conference and the meetings. A copy of the slide presentation is attached hereto as Exhibit 99.2.

The information in this report (including Exhibits 99.1 and 99.2) is being "furnished" and shall not be deemed to be "filed" for purposes of Section 18 of the Exchange Act, or otherwise subject to the liability of that section, and shall not be incorporated by reference into any registration statement or other document filed under the Securities Act or the Exchange Act, except as shall be expressly set forth by specific reference in such filing.

Item 9.01. Financial Statements and Exhibits .

(d) Exhibits .

99.1 Press Release dated January 13, 2014, entitled, "Kopin Corporation to Present at 16 th Annual Needham Growth Conference."

99.2 Kopin Corporation Needham Growth Conference Presentation, dated January 15, 2014

SIGNATURE

Pursuant to the requirements of the Securities Exchange Act of 1934, the Registrant has duly caused this report to be signed on its behalf by the undersigned hereunto duly authorized.

KOPIN CORPORATION

Dated: January 14, 2014

By: /s/ Richard A. Sneider
Richard A. Sneider
Treasurer and Chief Financial Officer
(Principal Financial and Accounting Officer)

EXHIBIT INDEX

Exhibit	Description
99.1	Press Release dated January 13, 2014, entitled, “Kopin Corporation to Present at 16th Annual Needham Growth Conference.”
99.2	Kopin Corporation Needham Growth Conference Presentation, dated January 15, 2014

Exhibit 99.1

Contact:

Richard Sneider
Treasurer and Chief Financial Officer
Kopin Corporation
Phone: (508) 824-6696
Email: Richard_Sneider@kopin.com

Geoffrey Mogilner
Vice President
Edelman
Phone: (312) 233-1271
Email: geoffrey.mogilner@edelman.com

Kopin Corporation to Present at the 16 th Annual Needham Growth Conference

Westborough, MA, January 13, 2014 – Kopin Corporation (NASDAQ: KOPN), a leading developer of innovative wearable computing technologies and solutions, today announced it will present to the investment community attending the Needham Growth Conference in New York City on Wednesday, January 15, 2014. The presentation at The New York Palace Hotel will feature Kopin's CFO Rich Sneider at 2:50 p.m. Eastern Time.

The presentation will be available in real time and archived on the " Investors " section of the Kopin website, www.kopin.com .

About Kopin

Kopin is a leading developer and provider of innovative wearable technologies and solutions. Kopin's technology portfolio includes ultra-small displays, optics, speech enhancement technology, software, low-power chipsets, and ergonomically designed headset computing systems. Kopin's proprietary components and technology are protected by more than 200 global patents and patents pending. For more information, please visit Kopin's website at www.kopin.com .

Kopin, CyberDisplay and Golden-i are trademarks of Kopin Corporation.

###

Exhibit 99.2

KOPIN
Revolutionizing the way
people see, hear, and communicate
Needham
Growth
Conference
2014
January 15, 2014

FORWARD LOOKING STATEMENTS

This presentation includes forward-looking statements within the meaning of the United States Private Securities Litigation Reform Act of 1995. These statements relate to our expected future financial and operating performance, growth in the markets in which our products are sold, our market share for our products, and our significant customers. We may use words such as “expects,” “anticipates,” “intends,” “plans,” “believes,” “could,” “seeks,” “estimates,” and variations of such words and similar expressions in identifying forward-looking statements. In addition, any statements which refer to expectations, projections, our stock value multiple, the value of head-worn computing and or Golden-i products, or other characterizations of future events or circumstances are forward-looking statements. These statements are not guarantees of future performance and involve certain risks, uncertainties and assumptions which are difficult to predict. Actual outcomes and results may differ materially from what is expressed or forecasted in such forward-looking statements, whether as a result of new information, future events or otherwise. We refer you to the documents the Company files from time to time with Securities and Exchange Commission, and specifically the “Risk Factors” section of the Company’s Form 10-K for the period ended December 29,2012 and Form 10-Q for the three month period ended September 28, 2013. We do not undertake to update or revise any forward-looking statements, whether as a result of new information, future events or otherwise.

KOPIN

INVESTMENT SUMMARY

FOCUS

Wearable Technology Focus

- Head-Worn Device Market estimated to be > $9 Billion by 2019
- Consumer HMD Market CAGR is Expected to be > 70% from 2013 to 2019

MODEL

Business Model

Design and License concept systems and provide critical components

STRONG TECHNOLOGY

Strong IP and Technology

200+ patents globally (display, software, speech enhancement, noise cancellation, ergonomics wearable systems

FINANCIAL POSITION

Strong Financial Position

- Cash and S/T investments (>$123M @ September 28, 2013)
- No debt

KOPIN

YOU PROBABLY HEARD…
WEARABLES WILL BE BIG

Consumer head-worn device market segment expected to grow from 2013–2019*

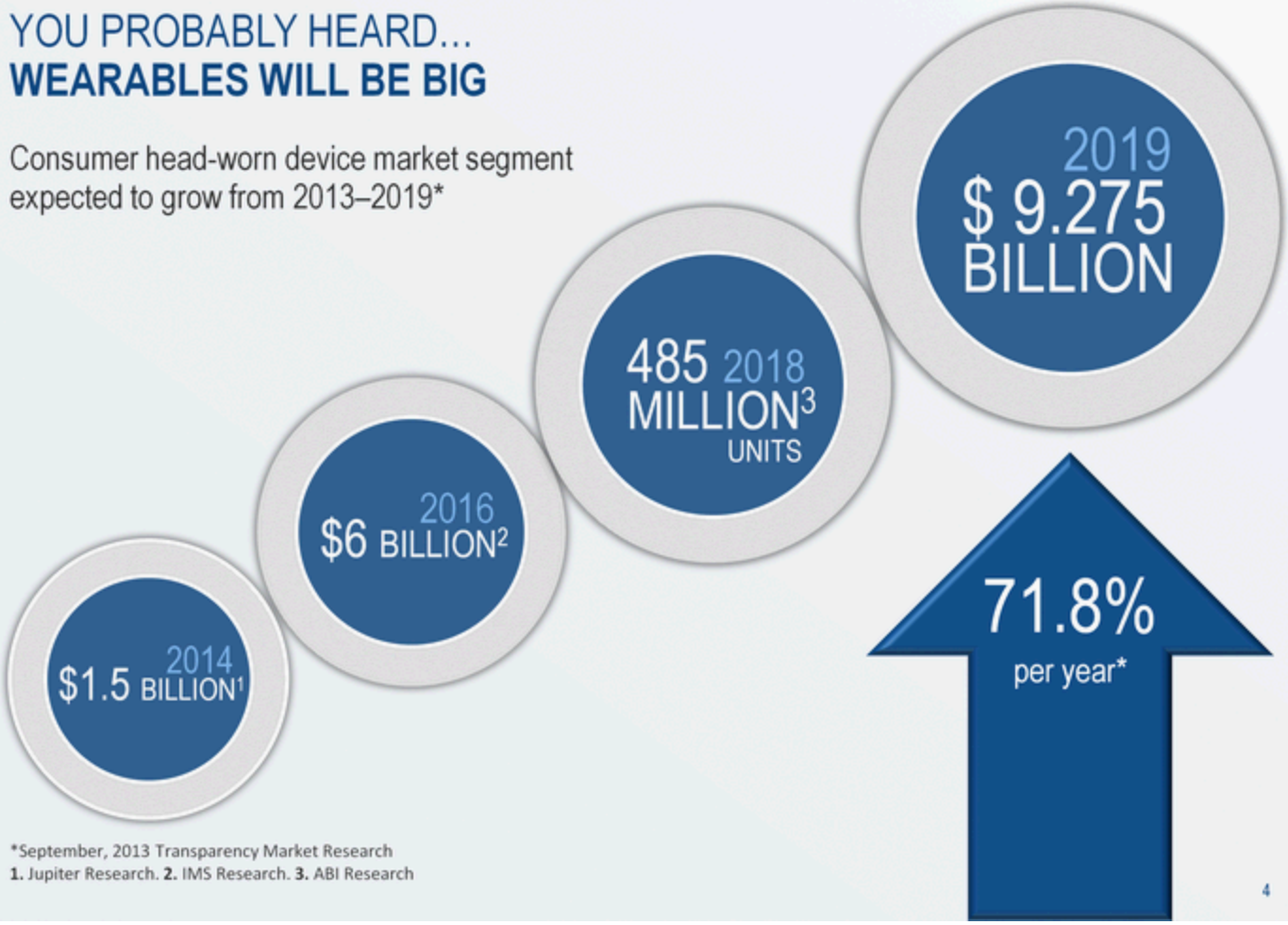

*September, 2013 Transparency Market Research
1. Jupiter Research. **2.** IMS Research. **3.** ABI Research

KOPIN

THE WEARABLE TRANSITION IS ALREADY UNDERWAY!

2014 CONSUMER ELECTRONICS SHOW – LAS VEGAS

We are approaching a time where the human body can be retrofit in wearable technology from head-to-toe*.

***Source**: *WSJ*. Where to Wear Your Technology? Torso to Toe

EXECUTING OUR STRATEGY

HISTORICAL DIFFERENTIATION

- Leverage display infrastructure and patents
- Ruggedization lessons learned from US military, IBM and others

- Over 30 million displays sold to global consumer electronic companies (Samsung, JVC, Panasonic, Nikon, others)
- Over 200,000 display modules to US military for thermal sights

EXECUTING OUR STRATEGY

- Developed the Golden-i head-worn system
- Created strategic partnerships, for example:
  - Motorola Solutions
    - Launched HC1, wearable headset computer for the enterprise based on Kopin Reference Design, software and critical components
  - Ask Ziggy (Siri-like" voice technology)
- Strategic investments and acquisitions, including:
  - Forth Dimension Displays (Reflective LCOS)
  - Ikanos (Software),
  - eMDT (Low power IC design),
  - Aurisound technology (Noise Cancellation)
- Constructing a wearable tech center in Silicon Valley for improving voice technology, prototyping, testing and refining wearable solutions

The last 5 years

WEARABLE HEADSET FOCUS

KOPIN

THE RESULTS

A PORTFOLIO OF KEY WEARABLE TECHNOLOGIES

KOPIN UNDERSTANDS THE COMPLETE SYSTEM

SOME OF OUR NOTABLE WEARABLE PARTNERSHIPS

VUZIX SMART GLASSES, M100

RECON INSTRUMENTS JET

MOTOROLA HC1

KOPIN

MILITARY FOCUS - NEXT GENERATION SIGHTS

- Retain high resolution direct visual optical performance
- Maintain existing reticle and boresight
- Active Target reticle:
  - Range and Wind Information
  - GPS and Compass Information
  - Target ID
  - Sensor Fusion
- DVO always available

KOPIN

ACOG OVERLAY SIGHT PROJECT

- **Content:** ACOG 3.5X Overlay Reticle System
- **Program Status:** Internal R&D Program
- **Delivery Status:** Brassboard daytime viewable overlay reticle system demonstrated Q4 2011
- **Partner:** Trijicon Inc.

- Rapid prototype project team with Trijicon
- Integration of display into 3.5x35ACOG sight
- 640 x 480 monochrome
- Display Luminance >5000fL at 330mW (backlight)
- 1,000,000:1 dimming range

"luminance at this power level is excellent" NVL Jan 2012

KOPIN

PRECISION ACQUISITION & TARGETING SYSTEM (PATS)

- Internally Funded R&D Initiative
  - 2013 Design & Development
  - 2014 Product Introduction
- Objective Lens Clip-On Sight
  - Integrated Fire Control System
  - Clips-On to Existing DVO Sights
  - Integrated LRF, DVO Overlay & Ballistic Calculator
  - Day/Night Compatible DVO Overlay Display
  - Improves First Shot Probability & Lethality
  - Single CR-123 battery >50hours run time
  - 7 degree FOV display (matches RCO sight)
  - Integrated Eye Safe LRF (1.55um)
  - Proven Ballistic Computer Implementation
  - Precision Eyepiece Optics
  - Local or Remote Button Actuation
  - Ease of Installation and Boresighting

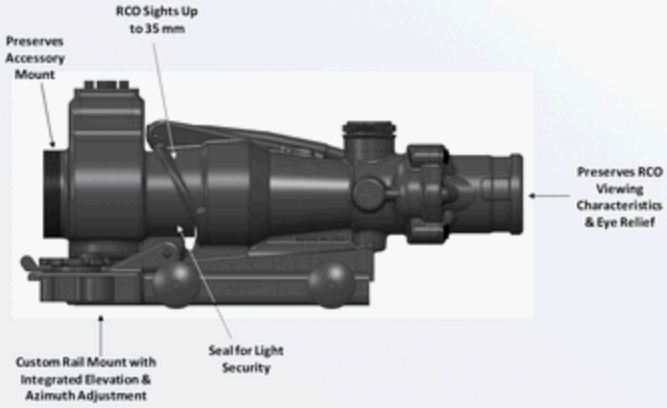

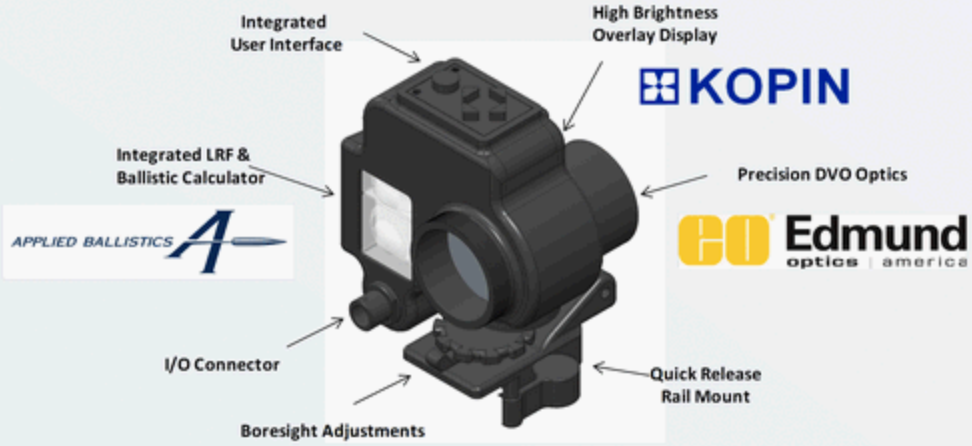

KOPIN

NEXT GENERATION SIGHTS

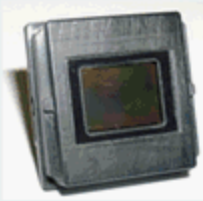

Generic Display Engine

+

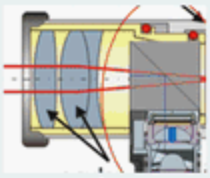

Retrofit Revised Optics

=

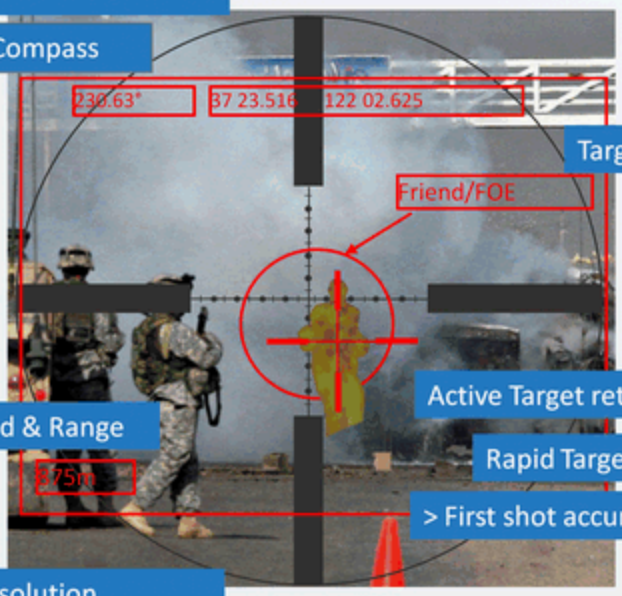

DVO stays on weapon
Retains boresight

Maintain fixed reticle

GPS & Compass

Target ID

Active Target reticle

Wind & Range

Rapid Targeting

> First shot accuracy

High Resolution
DVO always available

Visual and Sensor Fusion
SWIR, Thermal, I2

CONDENSED BALANCE SHEET

	September 28, 2013	December 29, 2012
Assets		
Cash and marketable securities	$ 122,747,803	$ 92,485,349
Total current assets	129,647,801	126,967,069
Equipment and improvements, net	6,191,163	8,486,406
Other assets	23,486,566	11,609,595
Noncurrent assets held for sale	-	29,145,732
Total assets	$ 159,325,530	$ 176,208,802
Liabilities and stockholders equity		
Total current liabilities	13,274,203	20,176,436
ARO	321,750	322,477
Noncurrent liabities held for sale	-	623,979
Total stockholders' equity	149,729,577	155,085,910
Total liabilities and stockholders' equity	$ 159,325,530	$ 176,208,802

- No long-term debt
- Repurchased over $30 million of its common stock since 2006
- Kopin has a new $30 million stock repurchase program in place

SUMMARY

A FOCUS ON WEARABLES

Technology

Customers/partners leverage our portfolio of key technologies

- LCOS displays (transmissive and reflective)
- Optics
- Low power IC
- Ergonomics
- Software
- Electronics
- Packaging
- Speech enhancement
- Natural speech software

We understand the complete wearable headset system requirements

Customers

Demonstrate that the breadth of our knowledge and increase our critical component offerings enabling our partners to develop tailored solutions and reduce their time to market

Innovation

Continue to enhance our IP portfolio on key technologies and concept system designs in order to stake out a significant position in the fast growing wearable technology space

Filed about 100 patents in the past 5 years

Needham Growth Conference 2014

January 15, 2014